600-700nm OPTICAL ISOLATORS

www.isowave.com
64 Harding Avenue
Dover NJ 07801
Phone 973-328-7000
Fax 973-328-7036
sales@isowave.com

DESCRIPTION

ISOWAVE offers a wide variety of isolators for the 600-700nm wavelength band. Features to choose from include 2mm and 5mm clear apertures, fixed or tunable polarizers, broad band isolation without tuning and three power level options*.
Single and Semi-Double (SD) stage versions provide different isolation level options. A Faraday rotator with no polarizers is also available.

*Low – Absorptive glass plate
*Medium – Glan Taylor Polarizer (no escape ports)
*High – Glan Taylor Polarizer with dual escape ports

FEATURES

- **Wide Tuning Range**
- **Mounting Collar Included**
- **High Isolation**
- **Low Insertion Loss**

MODEL NUMBER	Clear Aperture	Tunable	Broad-band	Isolation Minimum / Typical	Ins Loss Typical / Maximum	Transmission Minimum / Typical	Power Handling	Diameter	Length
	mm	Yes/No	Yes/No	dB	dB	%	W/cm2	inch / mm	inch/mm
I-633-2-FR	2	N	N	30 / 35	0.2	95	300	1.0 / 25.4	1.0 / 25.4
I-633-2L	2	N	N	38 / 40	1.4/1.6	69/72	10	1.0 / 25.4	2.40 / 61
I-633-2M	2	N	N	38 / 40	0.5 / 0.7	85 / 89	100	1.0 / 25.4	3.54 / 90
I-633-2H	2	N	N	38 / 40	0.5 / 0.7	85 / 89	250	1.0 / 25.4	4.13 / 105
I-6070C-2L	2	N	Y	35 / 38	1.4/1.6	69/72	10	1.0 / 25.4	2.40 / 61
I-6070C-2M	2	N	Y	35 / 38	0.5 / 0.75	84 / 89	100	1.0 / 25.4	3.54 / 90
I-6070C-2H	2	N	Y	35 / 38	0.5 / 0.75	84 / 89	250	1.0 / 25.4	4.13 / 105
I-633-5-FR	5	N	N	30 / 35	0.2	95	300	1.375 / 34.9	3.07 / 78
I-67T-5L	5	Y	N	38 / 40	1.4/1.6	69/72	10	1.375 / 34.9	4.12 / 105
I-67T-5M	5	Y	N	38 / 40	0.5 / 0.7	85 / 89	100	1.375 / 34.9	4.12 / 105
I-67T-5H	5	Y	N	38 / 40	0.5 / 0.7	85 / 89	250	1.375 / 34.9	5.01 / 127
I-6070C-L	5	Y	Y	38 / 40	1.4/1.6	69/72	10	1.375 / 34.9	4.12 / 105
I-6070C-M	5	Y	Y	38 / 40	0.5 / 0.75	84 / 89	100	1.375 / 34.9	4.12 / 105
I-6070C-H	5	Y	Y	38 / 40	0.5 / 0.75	84 / 89	250	1.375 / 34.9	5.01 / 127
I-67-SD-L	5	Y	N	50 / 55	1.8 / 2.3	56 / 66	10	1.375 / 34.9	4.12 / 105
I-67-SD-M	5	Y	N	55 / 60	1.0 / 1.5	70 / 79	100	1.375 / 34.9	4.12 / 105
I-67-SD-H	5	Y	N	55 / 60	1.0 / 1.5	70 / 79	250	1.375 / 34.9	5.01 / 127

Part Number Options

FR = Faraday Rotator
L, M, H = Polarizer Power Level Options: Low, Medium, High
C = Broadband Isolation: 30dB over +/-50nm no tuning required
T = Tunable: Input polarizer may be rotated to maximize isolation
SD = Semi Double: Single center polarizer, two rotator isolator.

Wavelength Options

*All isolators may be ordered centered anywhere between 600 and 700nm. Isowave will optimize on best effort basis using available lasers, or customer may supply laser for alignment and testing.
*C models are optimized at 633nm as standard and work over the entire 600-700nm wavelength range without tuning
*See page three for typical performance curves, or ask Sales for an isolation curve based on your preferred center wavelength

Specifications subject to change without notice

600-700nm OPTICAL ISOLATORS
OUTLINE DIMENSIONS

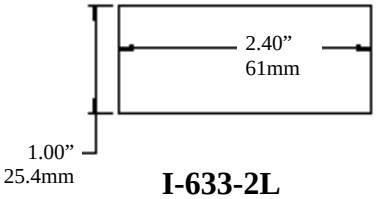

I-633-2L
I-6070C-2L

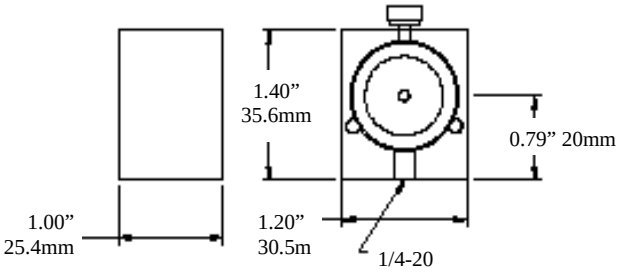

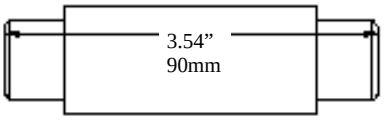

I-633-2M
I-6070C-2M

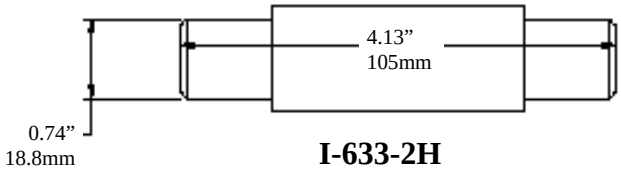

I-633-2H
I-6070C-2H

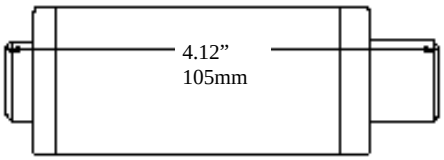

I-67T-5L or –5M
I-6070C-L or –M
I-67-SD-5L or –M

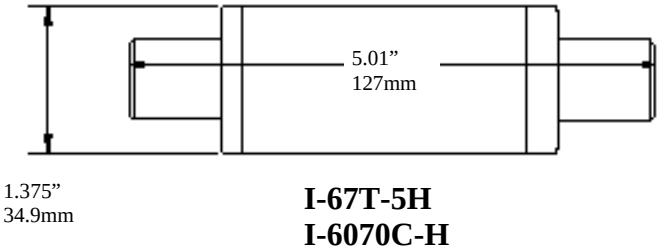

I-67T-5H
I-6070C-H
I-67-SD-H

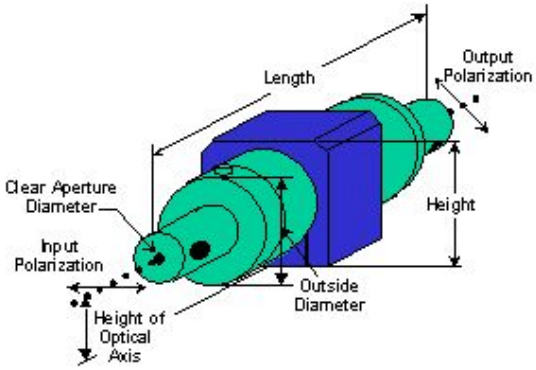

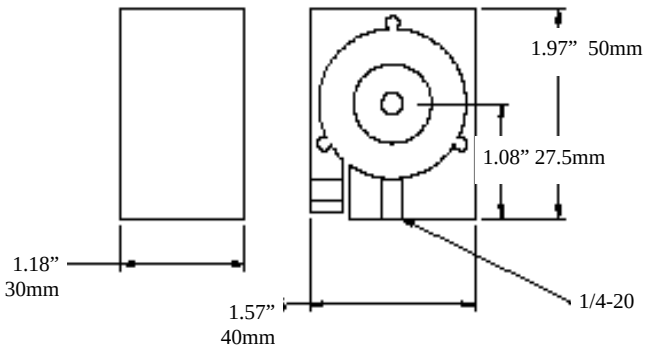

www.isowave.com
64 Harding Avenue
Dover NJ 07801
Phone 973-328-7000
Fax 973-328-7036
sales@isowave.com

Specifications subject to change without notice

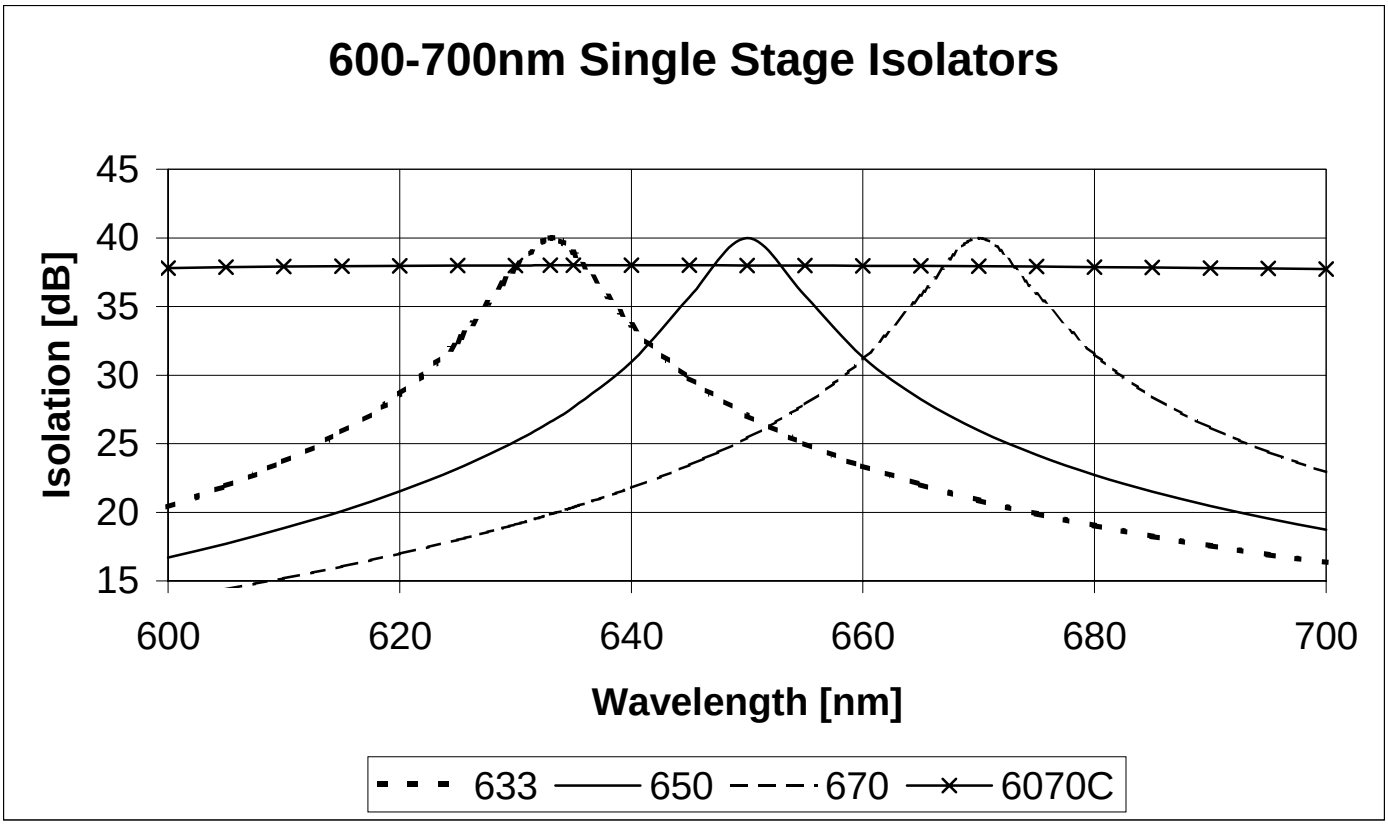

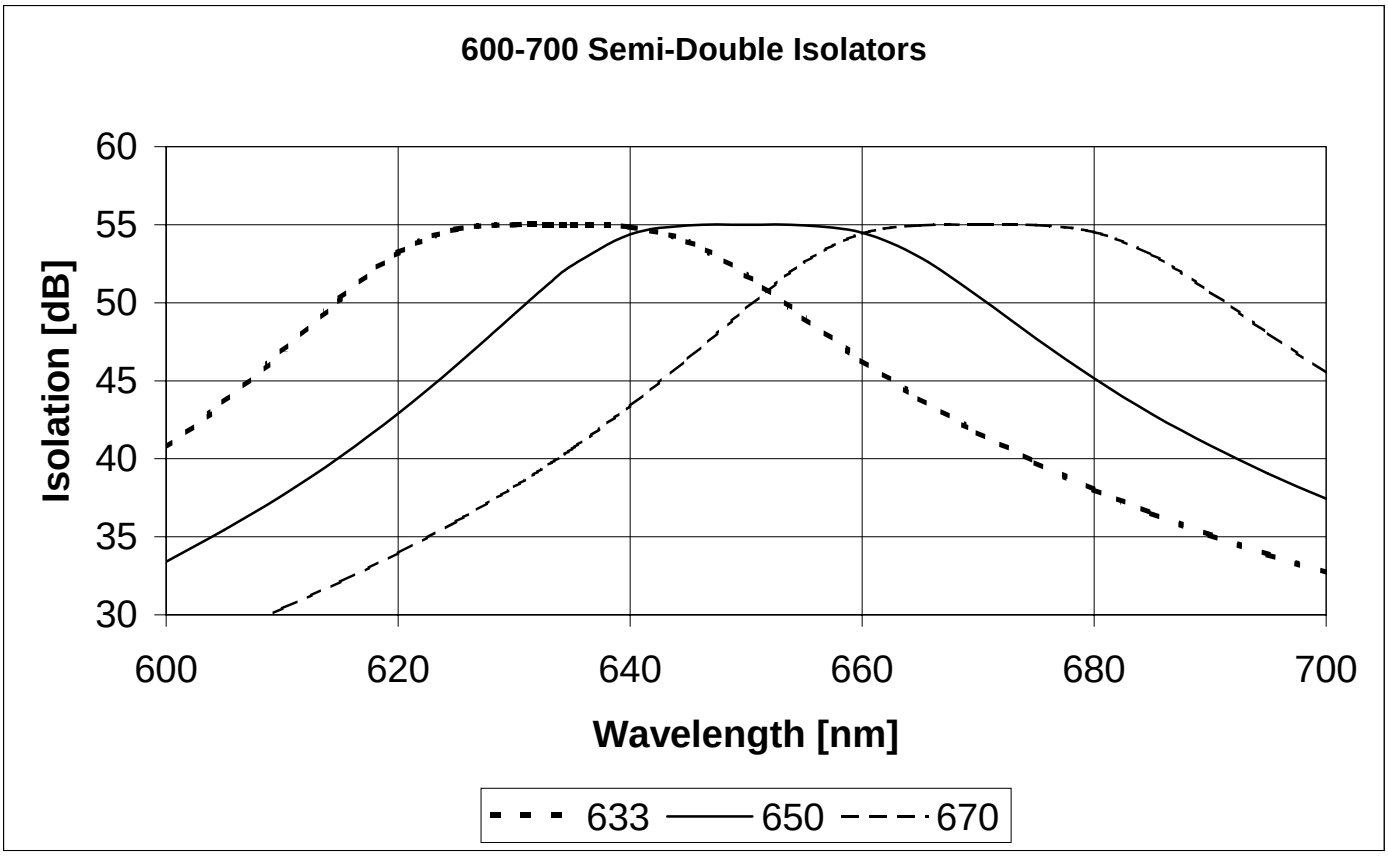

www.isowave.com
64 Harding Avenue
Dover NJ 07801
Phone 973-328-7000
Fax 973-328-7036
sales@isowave.com

Specifications
subject to change
without notice